THIS DRAWING IS UNPUBLISHED. RELEASED FOR PUBLICATION 103639 , 103639
© COPYRIGHT 103639MM ALL RIGHTS RESERVED.

REVISIONS

P	LTR	DESCRIPTION	DATE	DWN	APVD
	Z	REVISED PER ECO-17-015890	31OCT2017	RS	MM
	AA	REVISED PER ECO-20-001323	17JUN2020	SM	JO

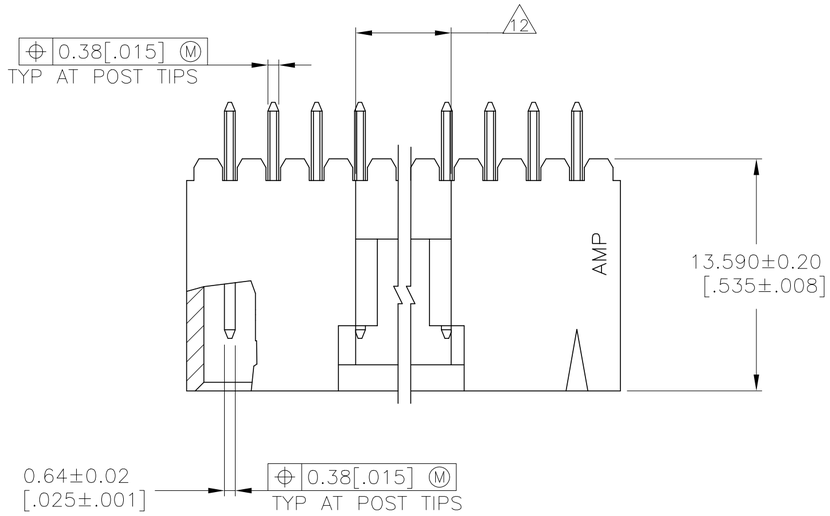

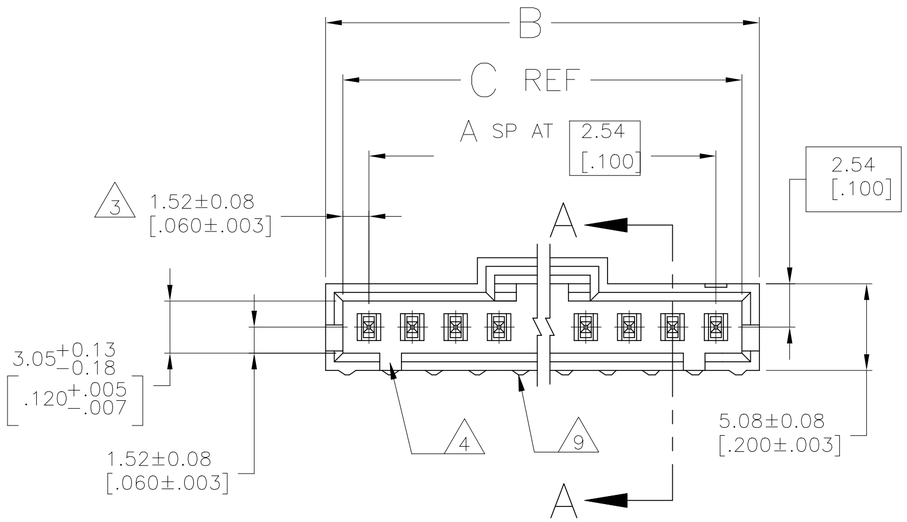

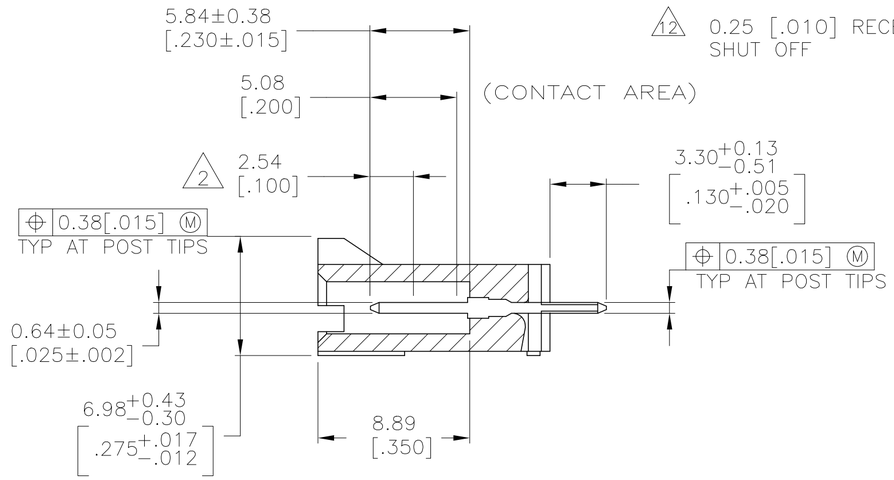

SECTION A–A

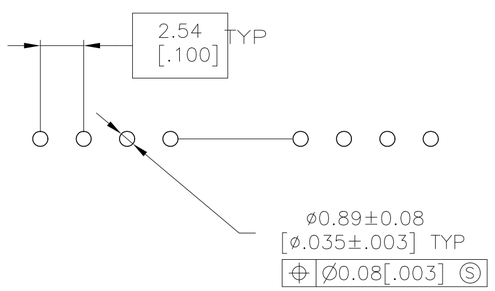

RECOMMENDED HOLE LAYOUT

1. .000100 BRIGHT TIN–LEAD OVER .000050 NICKEL.
2. POINT OF MEASUREMENT FOR PLATING THICKNESS.
3. THE NOTED DIMENSIONS APPLY AT THE INTERSECTION OF THE POST AND THE HOUSING.
4. ON ASSEMBLIES WITH FOUR OR MORE POSITIONS, TWO POLARIZATION SLOTS. ON ASSEMBLIES WITH TWO OR THREE POSITIONS, ONE POLARIZATION SLOT.
5. .000100 BRIGHT TIN OVER .000050 NICKEL.
6. PRELIMINARY PART–NOT RELEASED FOR PRODUCTION.
7. .000100 MATTE TIN OVER .000050 NICKEL.
8. HIGH TEMPERATURE CONFIGURATION
9. STANDOFFS NOT PRESENT ON UNDERSIDE OF ASSEMBLY
10. SUPERSEDED BY P/N 5–103639–2.
11. OBSOLETE PARTS: OBSOLETE CIS STREAMLINING PER D.RENAUD/D.SINISI
12. 0.25 [.010] RECESS PERMISSIBLE IN THIS AREA FOR MOLD SHUT OFF

THIS DRAWING IS A CONTROLLED DOCUMENT.

DIMENSIONS: mm [INCHES]

TOLERANCES UNLESS OTHERWISE SPECIFIED:
0 PLC ± –
1 PLC ± –
2 PLC ± 0.13[.005]
3 PLC ± –
4 PLC ± –
ANGLES ± –

MATERIAL: HOUSING:
FINISH: SEE TABLE

DWN S.SHUEY 05MAR91
CHK L.CASTAGNA 27MAR93
APVD L.CASTAGNA 27MAR93
PRODUCT SPEC 108–25034
APPLICATION SPEC 114–25026
WEIGHT –

TE Connectivity

NAME: HDR ASY,VERT,SNGL ROW 2.54[100] C/L 0.64[025] SQ PST, WTH PLZN&LTCHNG,AMPMODU MTE

SIZE A2 | CAGE CODE – | DRAWING NO C-103639 | RESTRICTED TO –

CUSTOMER DRAWING | SCALE 4:1 | SHEET 1 OF 2 | REV AA

103639

1471–9 (1/15)

THIS DRAWING IS UNPUBLISHED. RELEASED FOR PUBLICATION 103639 , 103639
© COPYRIGHT 103639By – ALL RIGHTS RESERVED.

REVISIONS

P	LTR	DESCRIPTION	DATE	DWN	APVD
	–	SEE SHEET 1	–	–	–

REMARKS	PLATING	C	B	A	NO. OF POSN	PART NO.
9 8	7	64.01 [2.520]	65.91 [2.595]	24	25	7-103639-4 OBSOLETE 11
9 8	7	61.47 [2.420]	63.37 [2.495]	23	24	7-103639-3 OBSOLETE 11
9 8	7	58.93 [2.320]	60.83 [2.395]	22	23	7-103639-2 OBSOLETE 11
9 8	7	56.39 [2.220]	58.29 [2.295]	21	22	7-103639-1
9 8	7	53.85 [2.120]	55.75 [2.195]	20	21	7-103639-0 OBSOLETE 11
9 8	7	51.31 [2.020]	53.21 [2.095]	19	20	6-103639-9
9 8	7	48.77 [1.920]	50.67 [1.995]	18	19	6-103639-8 OBSOLETE 11
9 8	7	46.23 [1.820]	48.13 [1.895]	17	18	6-103639-7 OBSOLETE 11
9 8	7	43.69 [1.720]	45.59 [1.795]	16	17	6-103639-6
9 8	7	41.15 [1.620]	43.05 [1.695]	15	16	6-103639-5
9 8	7	38.61 [1.520]	40.51 [1.595]	14	15	6-103639-4
9 8	7	36.07 [1.420]	37.97 [1.495]	13	14	6-103639-3
9 8	7	33.53 [1.320]	35.43 [1.395]	12	13	6-103639-2
9 8	7	30.99 [1.220]	32.89 [1.295]	11	12	6-103639-1
9 8	7	28.45 [1.120]	30.35 [1.195]	10	11	6-103639-0
9 8	7	25.91 [1.020]	27.81 [1.095]	9	10	5-103639-9
9 8	7	23.37 [.920]	25.27 [0.995]	8	9	5-103639-8
9 8	7	20.83 [.820]	22.73 [.895]	7	8	5-103639-7
9 8	7	18.29 [.720]	20.19 [.795]	6	7	5-103639-6
9 8	7	15.75 [.620]	17.65 [.695]	5	6	5-103639-5
9 8	7	13.21 [.520]	15.11 [.595]	4	5	5-103639-4
9 8	7	10.67 [.420]	12.57 [.495]	3	4	5-103639-3
9 8	7	8.13 [.320]	10.03 [.395]	2	3	5-103639-2
9 8	7	5.59 [.220]	7.49 [.295]	1	2	5-103639-1

11 SUPERSEDED BY 7-103639-1

11 SUPERSEDED BY 6-103639-0

REMARKS	PLATING	C	B	A	NO. OF POSN	PART NO.
8	5	15.75 [.620]	17.65 [.695]	5	6	3-103639-3
8	5	10.67 [.420]	12.57 [.495]	3	4	3-103639-2
10 8	5	8.13 [.320]	10.03 [.395]	2	3	3-103639-1
8	5	30.99 [1.220]	32.89 [1.295]	11	12	3-103639-0
8	5	25.91 [1.020]	27.81 [1.095]	9	10	2-103639-9
8	5	20.83 [.820]	22.73 [.895]	7	8	2-103639-8
6 8	5	18.29 [.720]	20.19 [.795]	6	7	2-103639-7
8	5	13.21 [.520]	15.11 [.595]	4	5	2-103639-6
8	5	5.59 [.220]	7.49 [.295]	1	2	2-103639-5
11 OBSOLETE 8	1	64.01 [2.520]	65.91 [2.595]	24	25	2-103639-4
11 OBSOLETE 8	1	61.47 [2.420]	63.37 [2.495]	23	24	2-103639-3
11 OBSOLETE 8	1	58.93 [2.320]	60.83 [2.395]	22	23	2-103639-2
8	1	56.39 [2.220]	58.29 [2.295]	21	22	2-103639-1
11 OBSOLETE 8	1	53.85 [2.120]	55.75 [2.195]	20	21	2-103639-0
8	1	51.31 [2.020]	53.21 [2.095]	19	20	1-103639-9
8	1	48.77 [1.920]	50.67 [1.995]	18	19	1-103639-8
8	1	46.23 [1.820]	48.13 [1.895]	17	18	1-103639-7
8	1	43.69 [1.720]	45.59 [1.795]	16	17	1-103639-6
8	1	41.15 [1.620]	43.05 [1.695]	15	16	1-103639-5
8	1	38.61 [1.520]	40.51 [1.595]	14	15	1-103639-4
8	1	36.07 [1.420]	37.97 [1.495]	13	14	1-103639-3
8	1	33.53 [1.320]	35.43 [1.395]	12	13	1-103639-2
8	1	30.99 [1.220]	32.89 [1.295]	11	12	1-103639-1
8	1	28.45 [1.120]	30.35 [1.195]	10	11	1-103639-0
8	1	25.91 [1.020]	27.81 [1.095]	9	10	103639-9
8	1	23.37 [.920]	25.27 [0.995]	8	9	103639-8
8	1	20.83 [.820]	22.73 [.895]	7	8	103639-7
8	1	18.29 [.720]	20.19 [.795]	6	7	103639-6
8	1	15.75 [.620]	17.65 [.695]	5	6	103639-5
8	1	13.21 [.520]	15.11 [.595]	4	5	103639-4
8	1	10.67 [.420]	12.57 [.495]	3	4	103639-3
8	1	8.13 [.320]	10.03 [.395]	2	3	103639-2
8	1	5.59 [.220]	7.49 [.295]	1	2	103639-1

103639

THIS DRAWING IS A CONTROLLED DOCUMENT.

DIMENSIONS: mm [INCHES]

TOLERANCES UNLESS OTHERWISE SPECIFIED:
0 PLC ± –
1 PLC ± –
2 PLC ± 0.13[.005]
3 PLC ± –
4 PLC ± –
ANGLES ± –

MATERIAL: HOUSING:

FINISH: SEE TABLE

DWN S.SHUEY 05MAR91
CHK L.CASTAGNA 27MAR93
APVD L.CASTAGNA 27MAR93
PRODUCT SPEC 108-25034
APPLICATION SPEC 114-25026
WEIGHT –

TE Connectivity

NAME: HDR ASY,VERT,SNGL ROW 2.54[.100]C/L 0.64[.025]SQ PST, WTH PLZN&LTCHNG,AMPMODU MTE

SIZE A2 | CAGE CODE – | DRAWING NO C-103639 | RESTRICTED TO –

CUSTOMER DRAWING | SCALE 1:1 | SHEET 2 OF 2 | REV AA

Mouser Electronics

Authorized Distributor

Click to View Pricing, Inventory, Delivery & Lifecycle Information:

TE Connectivity:

2-103639-5